Pull Down Shelving System
Installation Instructions

Part # 5PD-24C, 5PD-36C

Thank you for purchasing the Pull-Down Shelving System. Please familiarize yourself with the components listed in the adjoining table. Also note that this unit can be mounted to the bottom or to the side of the cabinet.

No.	Quantity	Description
①	2 pcs	Bottom Mount Brackets
②	4 pcs	Bolts
③	4 pcs	Nuts
④	4 pcs	Washers
⑤	2 sets	Side Frames
⑥	1 pc	Pull Rod
⑦	1 pc	Brace
⑧	2 pcs	Plate Racks
⑨	8 pcs	Shelf Pins
⑩	2 pcs	Support Bar (screw)
⑪	3 pcs	Support Bar

BOTTOM MOUNTING

Hole Pattern for Bottom Mounting

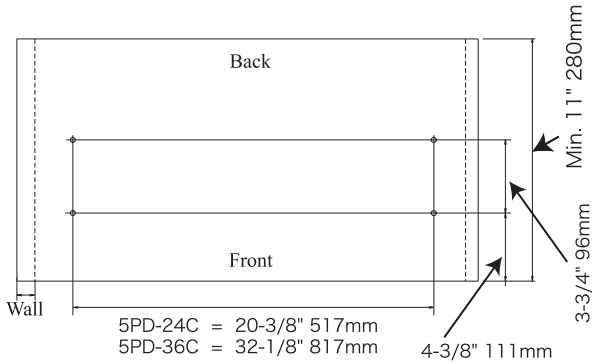

Bottom Mounting
Inner Cabinet Minimum Widths:
5PD-24C = 22-3/8" (569 mm)
5PD-36C = 34-3/16" (869 mm)

Note: this is a maximum dimension which is effected by height of the face frame lip in face frame applications. Adjust as neccessary.

1. Mount the bottom mount brackets to the cabinet floor ensuring that bolts with washers are coming up through bottom of cabinet.

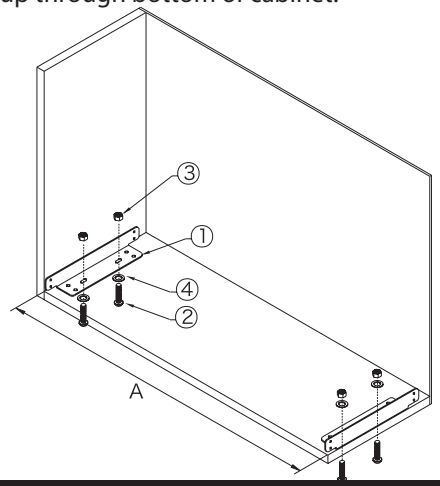

2. Mount the side frames to the bottom brackets. Attach pull rod to side frames. Proceed to Step 3.

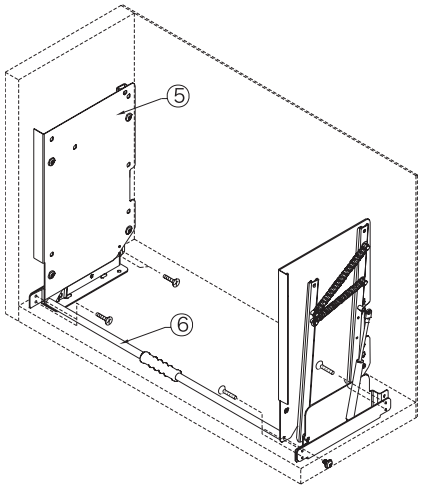

SIDE MOUNTING

Hole Pattern for Side Mounting

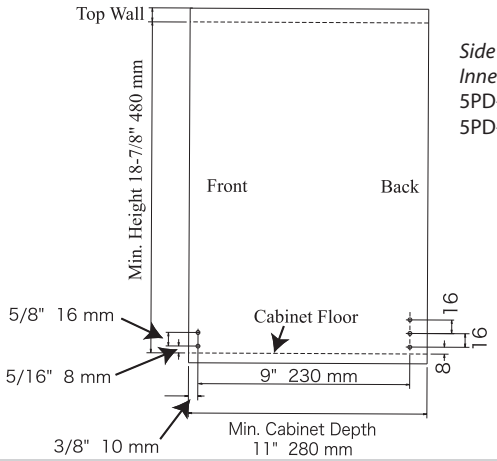

Side Mounting
Inner Cabinet Widths:
5PD-24C = 22-3/16" (564 mm)
5PD-36C = 34" (864 mm)

1. Mount the side frames to the walls of the cabinet. Attach pull rod to side frames. Proceed to Step 3.

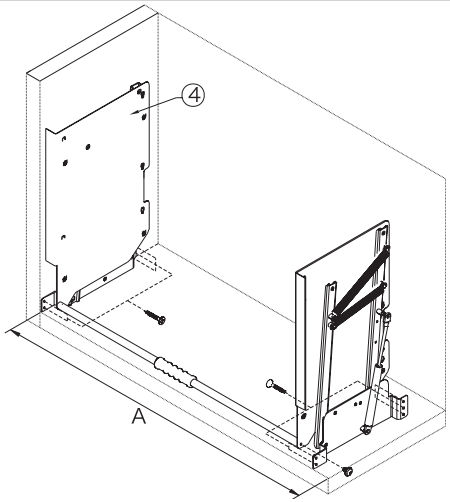

Over

2409 Plantside Drive
Jeffersontown, KY 40299
800-626-1126
502-491-2215 FAX
www.rev-a-shelf.com

No.	Quantity	Description
①	2 pcs	Bottom Mount Brackets
②	4 pcs	Bolts
③	4 pcs	Nuts
④	4 pcs	Washers
⑤	2 sets	Side Frames
⑥	1 pc	Pull Rod
⑦	1 pc	Brace
⑧	2 pcs	Plate Racks
⑨	8 pcs	Shelf Pins
⑩	2 pcs	Support Bar (screw)
⑪	3 pcs	Support Bar

Pull Down Shelving System
Installation Instructions

Part # 5PD-24C, 5PD-36C

3. Extend unit to the open position and secure rear brace to the frame arms.

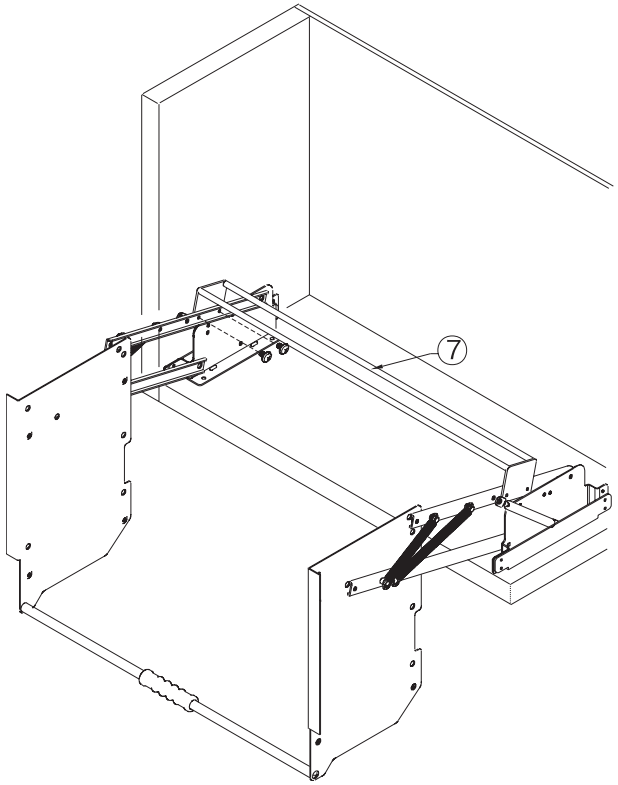

4. Insert the shelf pins into the plate racks.

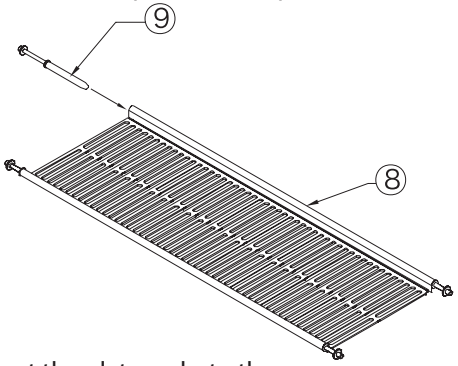

5. Mount the plate racks to the raised holes in the side frames by depressing spring loaded shelf pins.

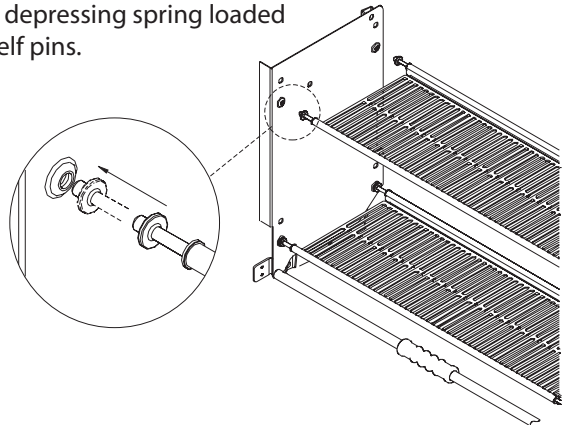

6. Screw the two front support bars to the side frames. Utilizing keyholes, press fit three rear support bars to the side frames.

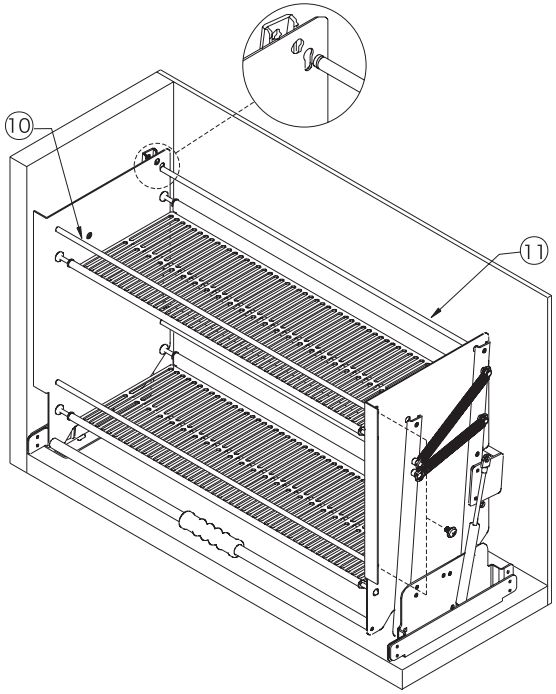

We hope you enjoy your new Rev-A-Shelf Pull-Down Shelving System.
If you have any questions please feel free to contact our Customer Service Specialist
at 800-626-1126 or visit Rev-A-Shelf online at www.rev-a-shelf.com